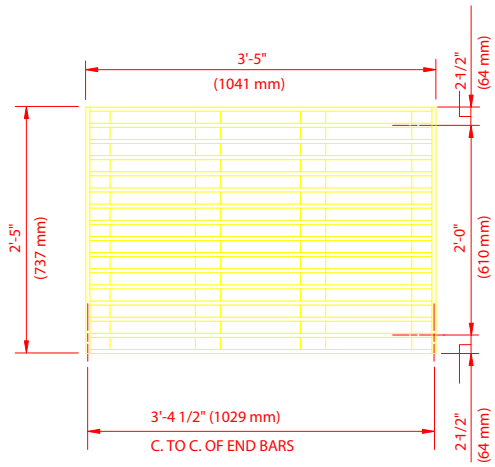

STEEL GRATE

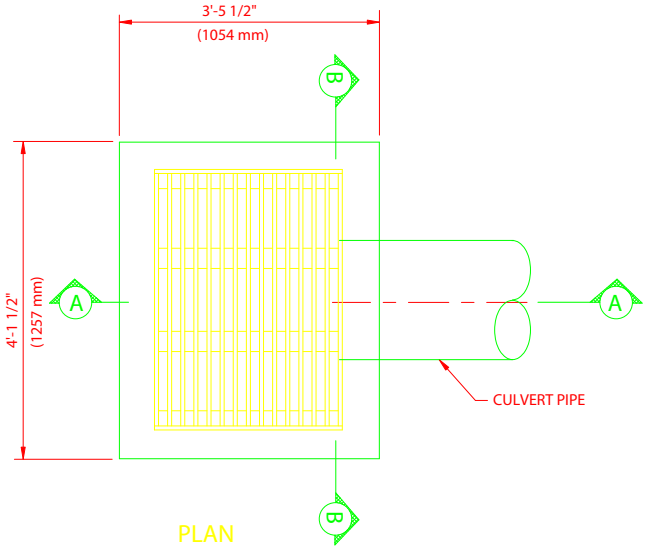

PLAN

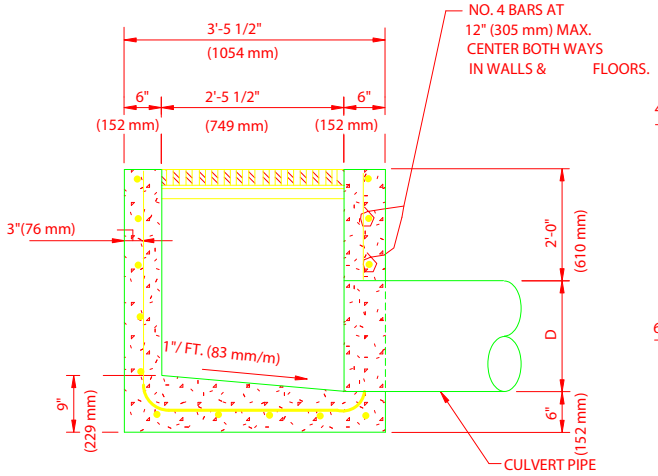

SECTION A-A

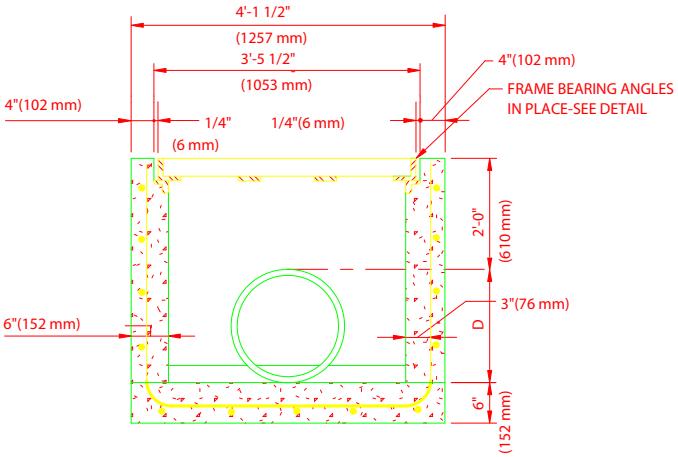

SECTION B-B

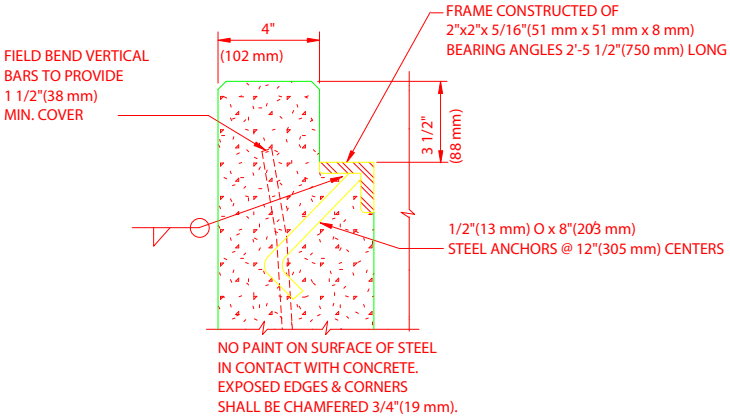

BEARING ANGLE DETAIL

MATERIAL FOR STEEL	GRATE & FRAME
6 BARS	3"x1/2"x2'-5"(76 mm x 13 mm x 737 mm)
15 BARS	3"x1/2"x3'-4"(76 mm x 13 mm x 1016 mm)
2 ANGLES	2"x2"x15/16"x2'-5 1/2" (51 mm x 51 mm x 24 mm x 750 mm)
APPROX. WEIGHT=342 LBS.(155 kg)	

NOTES:

1. INLETS SHALL BE CONSTRUCTED WITH HORIZONTAL TOPS UNLESS SPECIFIED OTHERWISE.
2. CONNECTIONS SHALL BE WELDED ON ONE SIDE OF BAR ONLY.
3. THE METRIC CONVERSIONS ARE PROVIDED IN PARENTHESIS FOLLOWING THE ENGLISH UNITS.